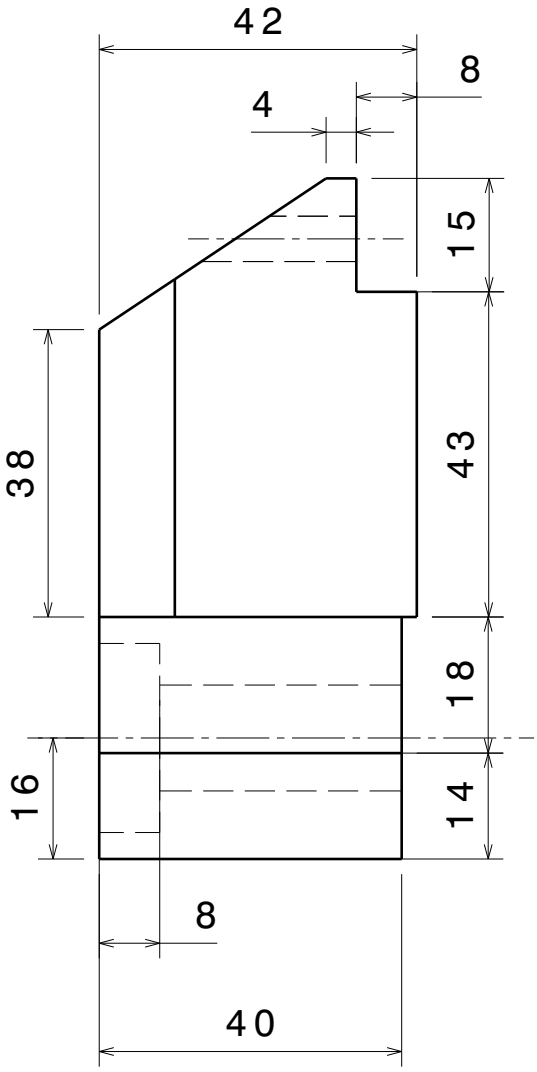
42
8
4
15
38
43
18
16
14
8
40

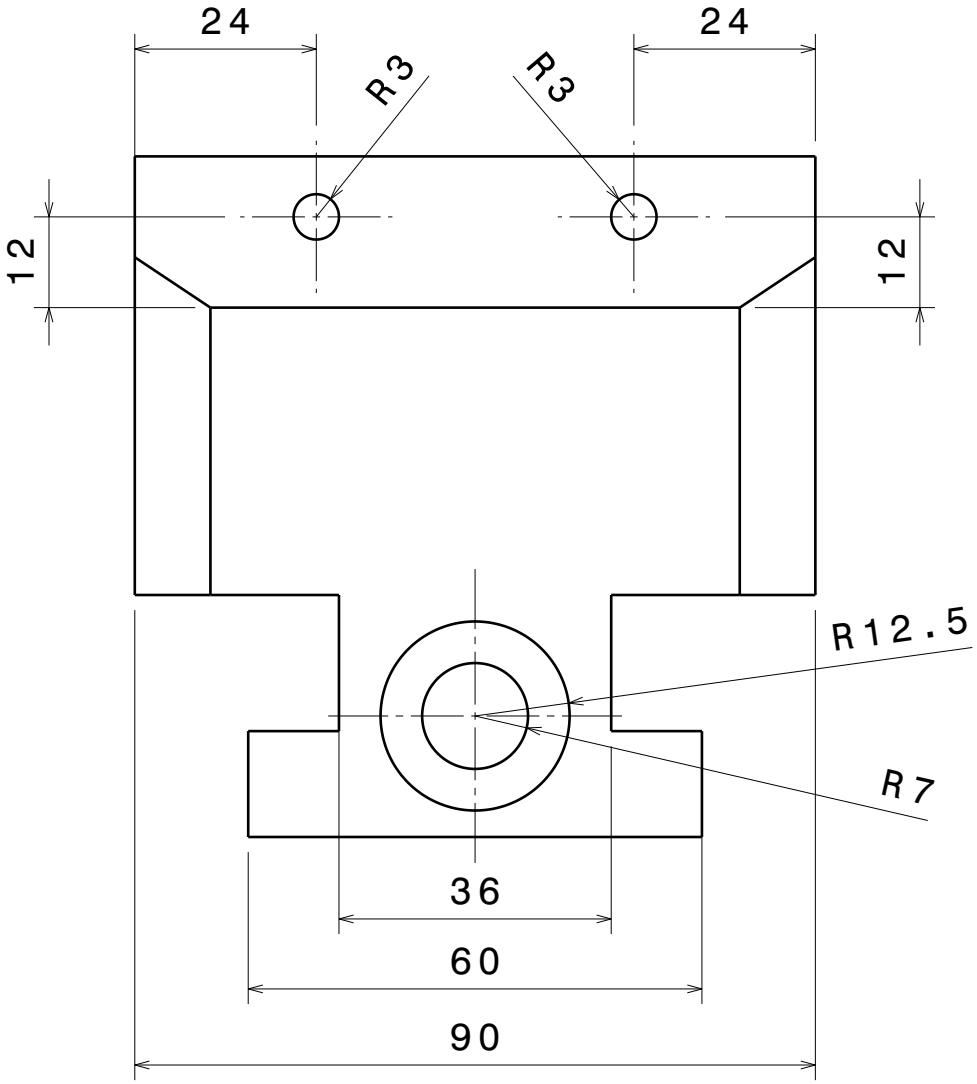
24
24
R3
R3
12
12
R12.5
R7
36
60
90

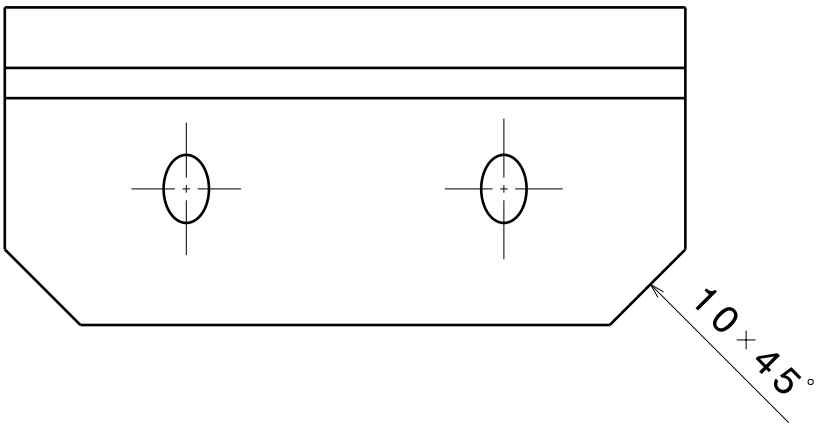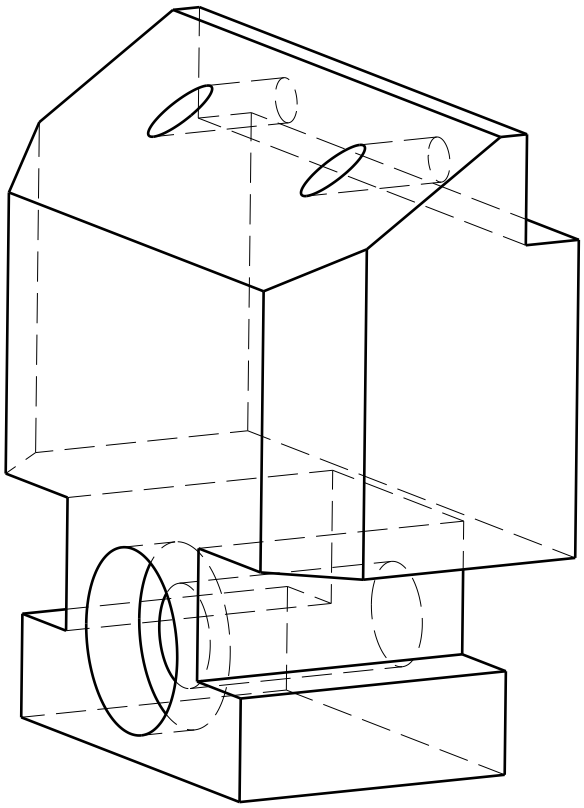
10×45°